Unisto Varis Detect

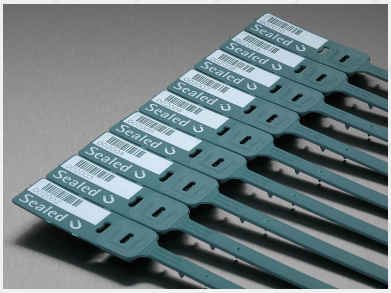

Detectable adjustable length security seal ideal to seal any kind of bags. Due to its high tensile strength our Unisto Varis is very popular in the Postal and Courier Services sector. Also used for application such as ballot & election boxes, Tote Boxes and Roll Cages. The special calibrated strap (7.2 x 2.0 mm) avoids undetected cutting. Spikes on the ribbon ensure a good grip to the neck of a bag. Barcoded numbering for fast, accurate reliable data capture and streamlining operations. Various plastic colours available.

© Unisto, www.unisto.com

Features of this security seal

Type of Seal
Adjustable Lenght Seals

Application
Bags, Roll Cages

- High tensile strength reduces risk of accidental breakage
- Even small pieces can be detected by a metal detector or X-ray machine (detectability depending on machine and application and should be tested)
- Spikes on the ribbon prevent pulling off the seal from the neck of the bag
- Calibration in cm on the reverse side makes cutting and welding of the ribbon visible
- Locking mechanism of stainless spring steel allows pulling tight with as little force as possible
- Barcoded numbering for fast, accurate and reliable data capture and streamlining operations
- Various colours for logistical functions
- Customer name/logo for clear identification
- Mats of 10 seals allows sequential distribution

© Unisto, www.unisto.com

Minimum size

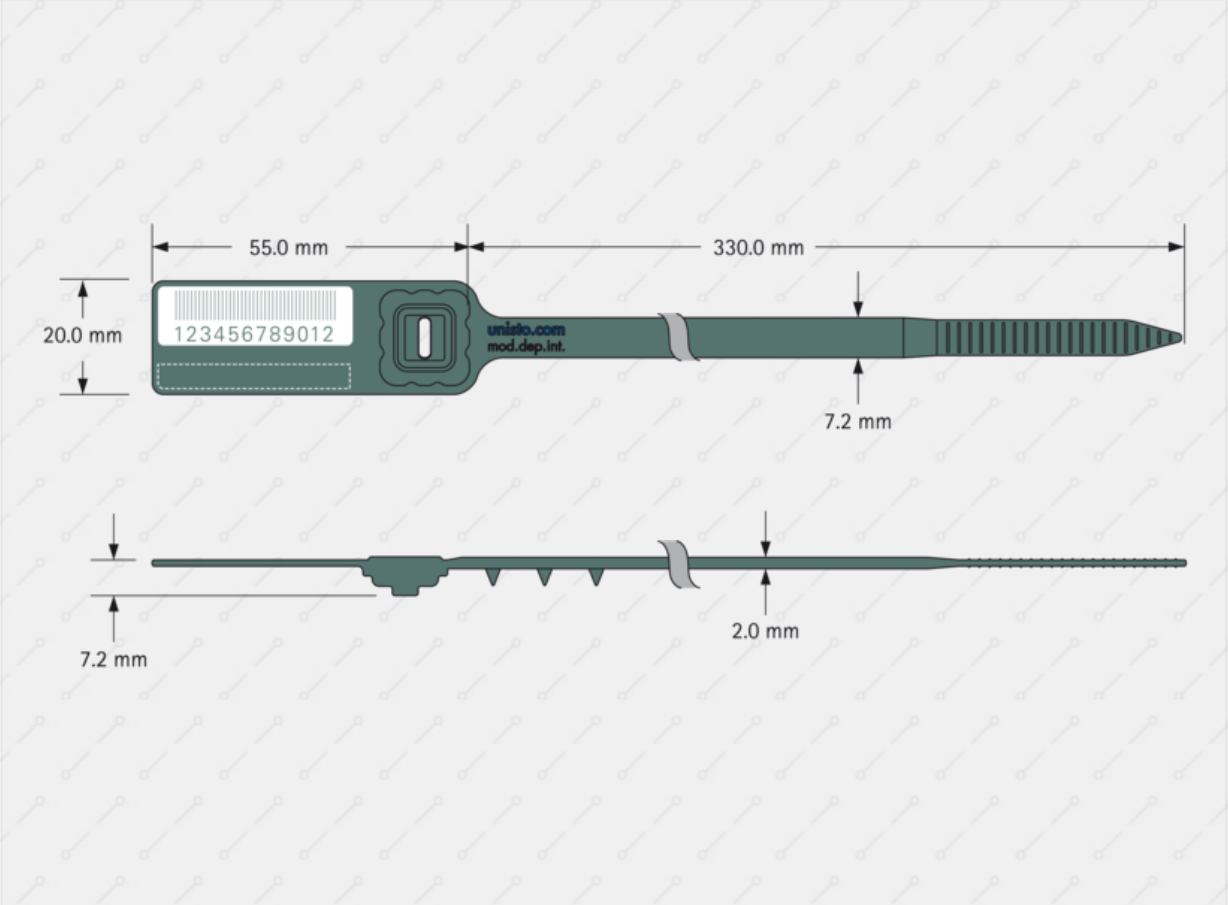

Materials
Strap/housing: polypropylene (PP)with detectable fill material Disc: polypropylene (PP) Locking mechanism: stainless spring steel

Tensile strength (loop)
Approx. 52 kg

Barcoding
Interleaved 2/5 or barcode 128

Customer name/logo
Foil printed

Colours - Barcode lasered from white foil
Green, red

Packing
Mats of 10 pieces, box of 1‘000 seals
54.5 x 23.0 x 17.5 cm (0.022 m3), approx. 6.0 kg

Storage
Seals should be stored in original box away from direct sunlight and chemical fumes. Store at 22°C/50% RH. Typical shelf life of seals made of PP are approx. 18 months from date of manufacture. Nevertheless please do not order more than an annual quantity.

© Unisto, www.unisto.com

How to close

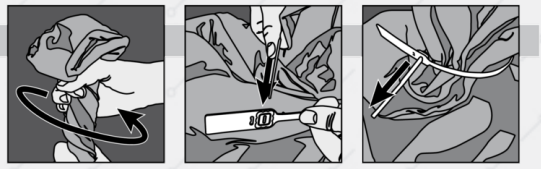

How to open

© Unisto, www.unisto.com